BIOLOGIX®



Assembly Instructions

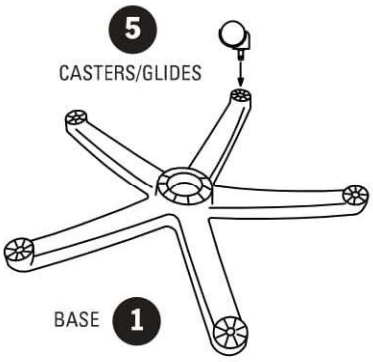

FIGURE 1.

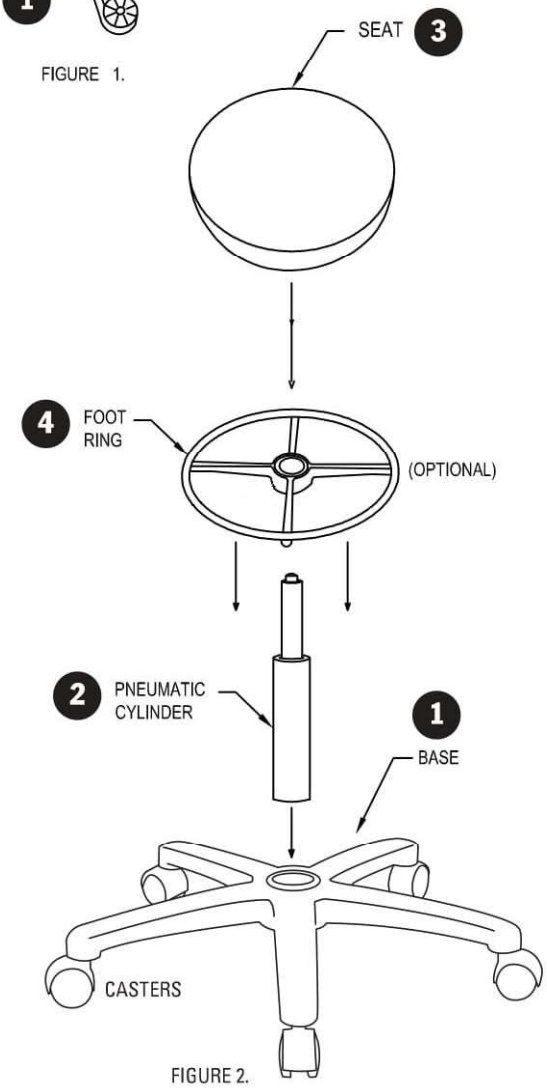

FIGURE 2.

1) Remove base, pneumatic cylinder, seat, foot ring (if included) and caster/glides from box.

2) Place base (1) upside down and insert casters/glides (5) (see figure 1).

3) Slide **optional** foot ring (4) over pneumatic cylinder from bottom (2) about halfway up the cylinder

4) Flip the base so casters/glides are on the floor and insert pneumatic cylinder (2) as shown in (figure 2) into center hole of base with colored button up. Lightly push down. Adjust foot ring to desired height

5) Align the center hole of the underside of the seat assembly (3) with the top of the pneumatic cylinder (2) and lightly push down. With the weight of your body carefully sit on the seat. This will press the base, pneumatic cylinder, and seat together.

6) To raise the height of your stool, take your weight off of the stool and pull on the ring on the underside of the seat and adjust.

7) To lower the height of your stool you must be seated with your weight on the seat - lift up on the ring.